TRACKING PERFORMANCE OF AN FDLMS NEAR-END CROSSTALK CANCELLER FOR xDSL SYSTEMS

R. C. Nongpiur, D. J. Shpak, and A. Antoniou

Dept. of Elec. and Comp. Eng., University of Victoria
Victoria, BC, Canada V8W 3P6
{rnongpiu, dale, aantoniou}@ece.uvic.ca

ABSTRACT

Digital subscriber lines (DSL) are fundamentally limited by near-end crosstalk (NEXT). A computationally efficient method to cancel the NEXT in high sampling rate DSL systems is to first detect the major NEXT and then deploy frequency-domain least-mean-square (FDLMS) adaptive filters to cancel them. However, when the environment is non-stationary, the mean residual error (MRE) rises increasing the noise to the system. A new technique for improving the tracking performance of the NEXT cancelling system is described. In the technique, the step-size of each adaptive filter is made proportional to the magnitude of the NEXT that is to be cancelled. Having an improved tracking performance lowers the MRE in a non-stationary environment, thereby translating into a higher data throughput.

1. INTRODUCTION

As xDSL technology is improving, the data-rate that can be achieved through twisted pairs is rising. A major impairment that hinders the simultaneous transmission of signals through a bundle of twisted pairs is near-end crosstalk (NEXT). Additionally, these lines are subjected to the varying temperatures, vibrations, etc. which can sometimes make the NEXT time-varying and non-stationary.

A common technique for the reduction of NEXT is to use adaptive filters to attenuate the NEXT signals coming from adjacent twisted pairs as much as possible [1]. However, this technique can be very expensive if the bundle contains a large number of twisted pairs. A better option is to first detect the presence of crosstalk on a line, and then add an adaptive filter to cancel each of the crosstalk sources detected [2].

As the sampling rate for the filter increases, the filter length required for NEXT cancellation also increases. By using a frequency-domain least-mean-square (FDLMS) instead of a time-domain least-mean-square (TD-LMS) algorithm, the amount of computation can be greatly reduced especially when the length of the adaptive canceller is large [3][4]. A fast method can be used [5] to cross-correlate the received signal with the reference signal to roughly estimate the impulse response of the NEXT coupling function [2]. Based on the magnitude of the impulse response of the NEXT coupling function, the magnitude of the step-size of each NEXT canceller can be adjusted, so as to increase the convergence rate especially during the initial stage of adaptation [6]. In a non-stationary environment, however, the MRE will increase resulting in an increased noise to the system. This increase in MRE can be lowered by improving the tracking performance of the NEXT cancelling system.

In this paper a new technique for improving the tracking performance of FDLMS adaptive filters is described. In the technique, the step-size of each adaptive filter is made proportional to the magnitude of the NEXT that is to be cancelled. This improved tracking performance lowers the MRE in a non-stationary environment thereby translating into a higher data throughput for the xDSL system. The paper is organized as follows. Section 2 describes the NEXT cancellation system which first detects the major NEXT sources before assigning FDLMS adaptive filters to cancel them. In section 3 we show how the tracking performance of the NEXT cancellation system is improved by varying the step-size according to the magnitude of the NEXT signal. Simulation results are presented in section 4.

2. NEXT CANCELLATION

The signal received on a single twisted pair in a bundle of an xDSL system typically contains an echo component. For the purpose of crosstalk detection, we assume that the echo at the hybrid has been cancelled by an echo canceller before detetcion is performed. The echo-cancelled signal can be expressed as

$$\hat{y}(n) = r(n) + \eta_b(n) + \sum_i h_i(n) * d_i(n) \qquad (1)$$

where $\hat{y}(n)$ is the noisy observation, $r(n)$ is the received message signal, $\eta_b(n)$ is additive background noise, $d_i(n)$ is the signal transmitted on pair i, and $h_i(n)$ is the time-domain crosstalk coupling function between pair i and the considered pair.

In most cases, the impulse response of the channel can be readily estimated [7]. Hence the received signal can be removed, leaving only the crosstalk signals. With the received signal and the transmitted signal echo removed, the signal $y(n)$ can be expressed as

$$y(n) = \eta_b(n) + \sum_i h_i(n) * d_i(n) \qquad (2)$$

To achieve efficiency, the block length of each adaptive filter can be adjusted according to the magnitude of the NEXT signal. If the magnitude of the NEXT from a particular line is smaller than a prescribed threshold, the NEXT canceller for that line can be removed. In order to estimate the magnitude of each NEXT signal, the NEXT cancellers are coupled with the NEXT detectors

[2] as shown in Fig. 1. The NEXT detectors use a fast cross-correlation of the input and received signal to estimate the magnitude of the NEXT coupling function. For the ideal case where

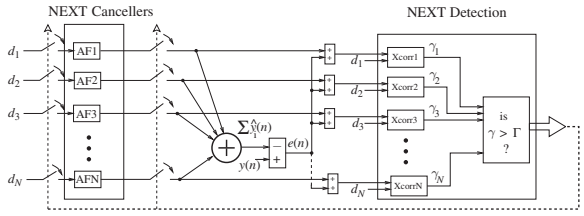

Figure 1: NEXT adaptive canceller.

each transmitted signal d_i is uncorrelated and has an energy ε, i.e., $R_{d_i}(k) = \varepsilon\delta(k)$, we have

$$R_{y\,d_i}(l) = \varepsilon h_i(l) \tag{3}$$

This shows that if signals d_i are uncorrelated, the crosscorrelation is proportional to the impulse response of the crosstalk coupling.

The adaptation is started by using the NEXT detectors to estimate the magnitude of the NEXT in each line. To decide whether the crosstalk signal requires cancellation by an adaptive filter, a threshold value Γ can be set [2]. If

$$\gamma_i = \frac{\max|R_{y\,d_i}(l)|}{\sum_{l=0}^{L}|R_{y\,d_i}(l)|} > \Gamma \tag{4}$$

then the NEXT signal is considered large enough to require cancellation.

3. TRACKING PERFORMANCE

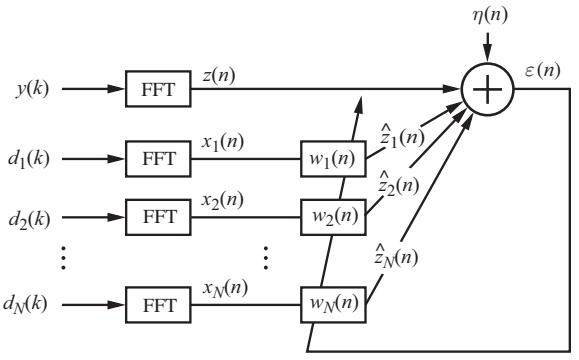

Figure 2: Adaptive filtering in the frequency domain for each frequency bin.

The model of the FDLMS algorithm for cancelling the NEXT is shown in Fig. 2. This is an extension to the model used by Bershad et al. [8] that incorporates multiple adaptive filters. The input signal to each FFT block is assumed to be wide-sense stationary making the disjoint spectral output uncorrelated. The input is also assumed to be a joint Gaussian random process, so that the disjoint bins provide statistically independent outputs. Thus each of the spectral taps will be operating on independent data [9].

The input signals to the various FFT blocks are assumed to be statistically independent from one another. The weight update equation for adaptive filter i in each frequency bin is given by

$$w_i(n+1) = w_i(n) + \mu_i\epsilon(n)x_i^*(n) \tag{5}$$

where $w_i(n)$ is the complex scalar weight during the nth iteration of adaptive filter i, $x_i(n)$ is the ith frequency-domain input data sequence, μ_i is the ith feedback coefficient, and $\epsilon(n)$ given by

$$\begin{aligned}\epsilon(n) &= z(n) - \sum_i \hat{z}_i(n) + \eta(n) \\ &= z(n) - \sum_i w_i(n)x_i(n) + \eta(n)\end{aligned} \tag{6}$$

is the error at each frequency bin.

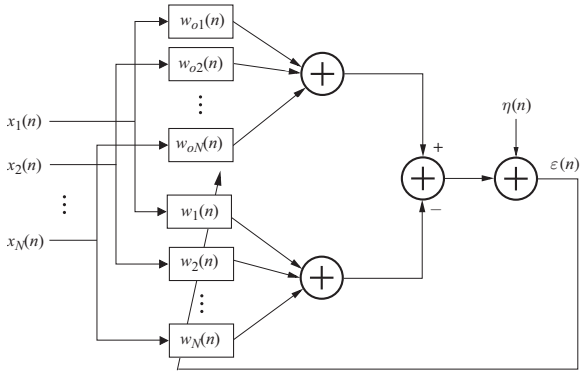

Figure 3: Time-varying model of the frequency-domain adaptive filter.

In order to analyze the tracking characteristics of the adaptive system, we have extended the time-varying model in [10] to the frequency domain. For a NEXT cancellation system with multiple FDLMS adaptive filters, the model is depicted in Fig. 3. In the model, $w_{oi}(n)$ represents one of the time-varying, complex scalar Weiner coefficients of the ith NEXT response in the frequency domain; $v(n)$ is a complex additive Gaussian noise; and $w_i(n)$ is the frequency-domain complex scalar weight of adaptive filter i, in the same frequency bin. The adaptive weight $w_i(n)$ attempts to track the variations in $w_{oi}(n)$. Thus $z(n)$ can be written as

$$z(n) = \sum_i z_i(n) = \sum_i w_{oi}(n)x_i(n) \tag{7}$$

It is assumed that a statistically independent Gaussian additive noise $\eta(n)$ is added to the error $\epsilon(n)$. The relevant statistics of $z_i(n)$ and $x_i(n)$ are

$$\begin{aligned}E[x_i(n)] &= E[z_i(n)] = 0 \\ E[|x_i(n)|^2] &= \sigma_x^2 \\ E[|\eta(n)|^2] &= \sigma_\eta^2\end{aligned} \tag{8}$$

The dynamic system is modeled as a transversal lowpass filter whose complex Wiener tap-weight $w_{oi}(n)$ undergoes a first-order Markov process [11][4] which is given by

$$w_{oi}(n+1) = aw_{oi}(n) + \beta_i(n) \tag{9}$$

where each $\beta_i(n)$ is a component of the process noise vector and the various $\beta_i(n)$ are independent from one another [10]. It is

also assumed that the bandwidth of the lowpass filter in (9) is very much smaller than the incoming data rate and as such a is very close to 1.

Since the Wiener weight is time varying, the weight error is given by

$$\nu_i(n) = w_i(n) - w_{oi}(n) \tag{10}$$

Using (5), (6), (7), (9), and (10) we get

$$\begin{aligned} \nu_i(n+1) &= w_i(n+1) - w_{oi}(n+1) \\ &= \nu_i(n) - \mu_i |x_i(n)|^2 \sum_i \nu_i(n) \\ &\quad + \mu_i \eta(n) x_i^*(n) - \beta_i \end{aligned} \tag{11}$$

Squaring the magnitude in (11), taking the expectation, and evaluating the terms yields

$$\begin{aligned} E[|\nu_i(n+1)|^2] &= E[|\nu_i(n)|^2](1 - 2\mu_i \sigma_x^2) + \\ &\quad \mu_i^2 \sigma_x^4 \sum_j |\nu_j(n)|^2 \\ &\quad + \mu_i \sigma_\eta^2 \sigma_x^2 + \sigma_{\beta_i}^2 \end{aligned} \tag{12}$$

Upon convergence, we have

$$E[|\nu_i(n+1)|^2] = E[|\nu_i(n)|^2] \tag{13}$$

and if we use (13) in (12) and replace $\mu_i \sigma_x^2$ with μ_{oi}, we obtain

$$E[|\nu_i(n)|^2] = \frac{\mu_{oi} \sigma_\eta^2}{2\sigma_x^2} + \frac{\sigma_{\beta_i}^2}{2\mu_{oi}} + \frac{\mu_{oi}}{2} \sum_j E[|\nu_j(n)|^2] \tag{14}$$

Summing both sides of (14) with respect to i and rearranging the terms gives

$$\sum_i E[|\nu_i(n)|^2] = \frac{\frac{\sigma_\eta^2}{2\sigma_x^2} \sum_i \mu_{oi} + \frac{1}{2} \sum_i \frac{\sigma_{\beta_i}^2}{\mu_{oi}}}{1 - \frac{1}{2} \sum_i \mu_{oi}} \tag{15}$$

In a wireline environment, the magnitude of NEXT depends on the amount of capacitive (inductive) couplings between the twisted pairs causing the NEXT and the twisted pair receiving the NEXT. In a non-stationary xDSL environment, these couplings tend to vary over time due to variations in temperature, mechanical vibration, displacement etc. For a non-stationary environment in which the couplings vary slowly over time, it is reasonable to assume that variations in the coupling capacitance (inductance) is proportional to the magnitude of the coupling capacitance (inductance). Hence, considering $C_p(n)$ to be a random variable denoting the NEXT capacitive coupling, we can assume that at a certain time instant n, the variations are such that

$$E[\{C_p(n) - \gamma(n)\}^2] \propto \gamma(n)^2 \tag{16}$$

where $\gamma(n) = E[C_p(n)]$, so that

$$\frac{E[C_p(n)^2] - E[C_p(n)]^2}{E[C_p(n)]^2} \approx \text{constant} \tag{17}$$

In an xDSL environment, if the attenuation is considered to be approximately proportional to $\sqrt{f}$, where f is the frequency, the crosstalk power spectrum can be written as [12]

$$|H_{NEXT}(f,l)|^2 \approx \frac{(2\pi CR)^2}{4\alpha} f^{1.5} (1 - e^{-4\alpha\sqrt{f}l}) \tag{18}$$

where C is the cross-coupling capacitance, R is the load impedance, l is the length of the loop, and α is the real part of the propagation constant. In (18) the inductive coupling was ignored altogether; although for the differential mode it is typically smaller than the capacitive coupling, it is not insignificant [12].

From (18) it is observed that the power of the NEXT at a particular frequency is directly dependent on the magnitude of the capacitive coupling. And with (17) we can justify that the relative degree of variation of the complex Wiener tap weight $w_{oi}(n)$ of each NEXT at each frequency bin will be approximately the same. Thus we get

$$\frac{E[|\beta_i(n)|^2]}{|w_{oi}(n)|^2} \approx \text{constant} = \delta \qquad \text{for } i = 1, \ldots, N \tag{19}$$

where δ represents the degree of variation. Using (19) in (15) we have

$$\sum_i E[|\nu_i(n)|^2] = \frac{\frac{\sigma_\eta^2}{2\sigma_x^2} \sum_i \mu_{oi} + \frac{1}{2}\delta \sum_i \frac{|w_{oi}(n)|^2}{\mu_{oi}}}{1 - \frac{1}{2} \sum_i \mu_{oi}} \tag{20}$$

This equation shows that for a fixed value of the term $\sum_i \mu_{oi}$, $\sum_i E[|\nu_i(n)|^2]$ will be minimum if μ_{oi} is made proportional to $|w_{oi}(n)|^2$, that is

$$\mu_{oi} = k |w_{oi}(n)|^2 \tag{21}$$

In other words, the tracking performance of the adaptive filter will improve if μ_{oi} is made proportional to the magnitude of the Wiener coefficient. Also, in an FDLMS adaptive system $|w_{oi}(n)|$ varies for each frequency bin depending upon the spectrum of the NEXT transfer function. However, a good estimate of the average value of $|w_{oi}(n)|$ is the maximum value of $|R_{yd_i}(l)|^2$ defined in (3), that is

$$|w_{oi}|^2_{average} \approx c \left[\max_l \{ |R_{yd_i}(l)|^2 \} \right] \tag{22}$$

where $|w_{oi}|^2_{average}$ is the average value of $|w_{oi}(n)|$ in each frequency bin and c is some constant.

Since $R_{yd_i}(l)$ has already been calculated when estimating γ_i in (4), it can be reused without requiring additional computations. Thus for all the frequency bins in the ith adaptive filter, we have

$$|\mu_{oi}| = k \left[\max_l \{ |R_{yd_i}(l)|^2 \} \right] \tag{23}$$

where k is the appropriate constant chosen so that the MRE is below a certain prescribed threshold.

4. SIMULATION RESULTS

The tracking performance was simulated in a bundle consisting of 7 twisted pairs of gauge 26 AWG and length 7600 feet. HDSL2 was simulated in each of the pairs as specified in the T1E1.4 draft for HDSL2 standard [13]. The transmitted data from all of the lines were made available to each of the lines for the purpose of NEXT cancellation.

The non-stationary environment was simulated by varying the impulse response of the NEXT transfer function according to (9). The magnitude of the process noise vector for each NEXT transfer function was also made proportional to the square magnitude of the Weiner tap weight as in (19). The initial relative magnitude of the 6 NEXT used in the simulations were $[0.0005 \;\; 0.0996 \;\; 0.0009 \;\; 10 \;\; 0.0003 \;\; 8.3774]$ with the largest NEXT normalized to 10.

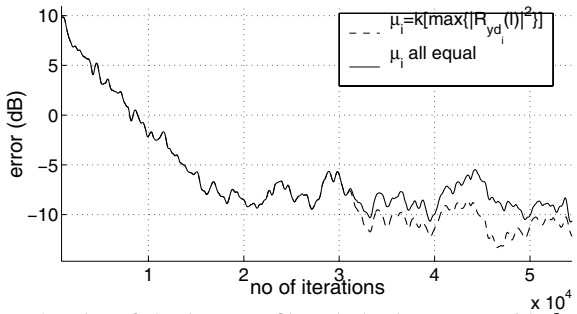

Figure 4: Plot of the lowpass filtered absolute error with $\delta = -40$dB in a nonstationary environment.

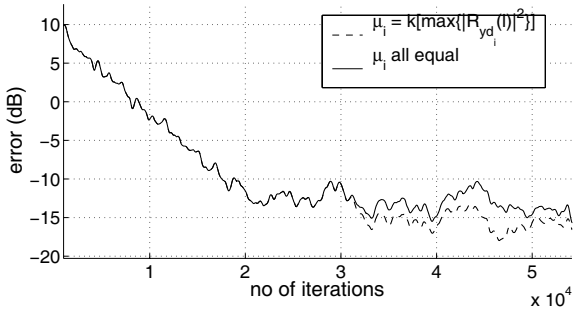

Figure 5: Plot of the lowpass filtered absolute error with $\delta = -45$dB in a nonstationary environment.

As mentioned in [6], the algorithm first varies μ_{oi} according to the magnitude of the NEXT in order to speed up the initial convergence and in the later stages of adaptation, the μ_{oi} are then made equal until the algorithm converges. Upon convergence, the μ_{oi} are varied according to (23) in order to improve the tracking performance of the NEXT cancellers. The μ_{oi} are varied in a way that $\sum \mu_{oi}$ is always constant. Figs. 4 and 5 show a comparison with μ_{oi} all equal and with μ_{oi} varied according to (23) in a non-stationary environment. As can be seen, there is significant improvement in the mean residual error (MRE) after the 30000th iteration which is the point where the step-size is varied according to (23). In Figs. 4 and 5 the degree of variation δ given in (19) is -40 dB and -45 dB, respectively.

It is important to note that in a stationary environment both the algorithms with μ_{oi} all equal and μ_{oi} varied according to (23) will have the same MRE upon convergence. If μ_{oi} is much less than unity (which is the case in this simulation and generally the case in NEXT and echo cancellers [6][14]), the MRE upon convergence is given by [6]

$$\text{MRE} \approx E[|\epsilon(\infty)|^2] = \frac{\sigma_\eta^2}{2} \sum_i \mu_{oi} + \sigma_\eta^2 \qquad (24)$$

This equation shows that if μ_{oi} is much less than unity, then both algorithms will have the same MRE in a stationary environment if the $\sum \mu_{oi}$ are the same. Fig. 6 shows the MRE upon convergence when the two algorithms are executed in a stationary environment with $\sum \mu_{oi}$ equal. It can be seen that the MREs are approximately equal for the stationary environment.

5. CONCLUSIONS

A technique for improving the tracking performance in a NEXT cancellation system was proposed. Using FDLMS adaptive filters

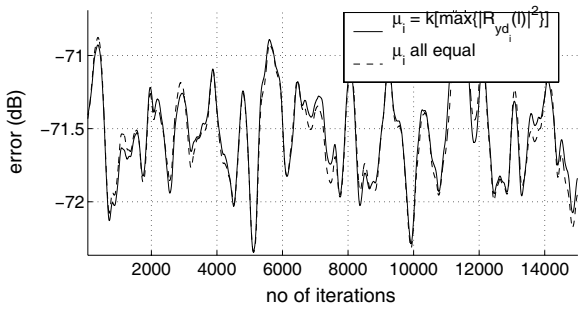

Figure 6: Plot of the lowpass filtered absolute residual error upon convergence in a stationary environment.

results in a lower computational complexity when the sampling rate is high and the filter length is long. Using the proposed modification, the tracking performance of the adaptive filters can be significantly improved and at almost no extra computational cost.

Acknowledgement

The authors are grateful to PMC-Sierra, Micronet, NCE Program, and the Natural Sciences and Engineering Research Council of Canada for supporting this work.

6. REFERENCES

[1] M. L. Honig, K. Steiglitz, B. Gopinath, "Multichannel signal processing for data communication in the presence of crosstalk," *IEEE Trans. Commun.*, vol. 38, no. 4, pp. 551-558, April 1990.

[2] R. C. Nongpiur, D. J. Shpak, and A. Antoniou, "NEXT cancellation in xDSL systems," *Proc. 36th Asilomar Conference on Signals, Systems and Computers, Pacific Grove, CA., vol. 1, pp. 393-397, Nov. 3-6, 2002*.

[3] J. J. Shynk, "Frequency-domain and multirate adaptive filtering," *IEEE Signal Processing Mag.*, vol. 9, no. 1, pp. 14-37, 1997.

[4] S. Haykin, *Adaptive Filter Theory*, Third Edition, Prentice Hall 1996.

[5] T. J. Shan and T. Kailath, "Adaptive algorithms with an automatic gain control feature," *IEEE Trans. Circuits Syst.*, vol. 35, no. 1, pp. 122-127, Jan. 1988.

[6] R. C. Nongpiur, D. J. Shpak, and A. Antoniou, "NEXT cancellers using FDLMS filters with improved convergence rate," *37th Asilomar Conference on Signals, Systems and Computers, Pacific Grove, CA., Nov. 9-12, 2003*.

[7] C. Zeng, C. Aldana, A. A. Salvekar, and J. M. Cioffi, "Crosstalk identification in xDSL systems," *IEEE J. Select. Areas Commun.*, vol. 19, no. 8, pp. 1488-1496, Aug. 2001.

[8] N. J. Bershad and P. L. Feintuch, "A normalized frequency domain LMS adaptive algorithm," *IEEE Trans. Acoust., Speech, Signal Processing*, vol. ASSP-34, no. 3, pp. 452-461, Jun. 1986.

[9] N. J. Bershad and P. L. Feintuch, "Analysis of the frequency domain adaptive filter," *Proc. IEEE*, vol. 67, pp. 1658-1659, Dec. 1979.

[10] B. Widrow, J. McCool, and M. Ball, "Stationary and nonstationary learning characteristics of the LMS adaptive filter," *Proc. IEEE*, vol. 64, pp. 1151-1162, 1976.

[11] O. Macchi, "Optimization of adaptive identification for time-varying filters," *IEEE Trans. Automat. Contr.*, vol. AC-31, no. 3, pp. 283-287, Mar. 1986.

[12] J. A. Bingham, *ADSL, VDSL, and Multicarrier Modulation*. John Wiley & Sons 1999.

[13] "Draft for HDSL2 Standard," *T1E1.4/99-006R5.*

[14] D. L. Duttweiler, "Proportionate normalized least-mean-squares adaptation in echo cancellers," *IEEE Trans. Speech Audio Processing*, vol. 8, no. 5, pp. 508-518, Sep. 2000.